YF Series

Weatherproof Position Monitoring Limit Switch

YF Series position monitoring switch boxes are rotary position indication devices designed to integrate valve and NAMUR rotary pneumatic actuator with a variety of mounting options, configurations, and internal switches or sensors. They are specially designed to be suitable for small size pneumatic actuators and valves to reduce installation space, yet still provide high performance by equipping a variety of switches and sensors.

FEATURES

- Easy, precise cam set with no need for a setting tool. Red cam for close, green cam for open.
- Terminal blocks and socket type terminal strip with screws (max. 2.5mm², 26 A @ 86˚F, approved by UL, CSA).
- Visual position indicator directly engaged with driving shaft to provide continuous position indication. Red for close, yellow for open.
- High strength, chemical resistant and transparent polycarbonate dome for high visibility and reliability.

SPECIFICATIONS

Enclosure:
Weatherproof IP 67, O-ring sealed.

Exterior and Interior Coating:
Epoxy-polyester coated to protect against corrosion.

Mounting Bracket:
Stainless steel acc. to VDI/VDE3845, NAMUR, SS1, SS2 as standard.

YF SERIES MODEL NUMBERING

Model Number: **Y** X X

Configuration:
F = Switch Only

Optional:
Port Style:
(Leave blank for 2-way Valves)
L = For L Ported 3-way Valves
T = For T Ported 3-way Valves

TEMPERATURE RANGE

-4˚F to 176˚F

SWITCH RATINGS

16 A @ 125/250 VAC
0.6 A @ 125 VDC
0.3 A @ 250 VDC
(approved by UL, CSA)

ADDITIONAL SPECIFICATIONS

Cable Entries:
(2) 1/2″ NPT.

Terminals:
8 block terminal strip
(6 for switches, 2 for solenoid valve power).

Position Indicator:
Dome type, 0-90˚, L-port, T-port.

Switches:
(2) SPDT mechanical switches.

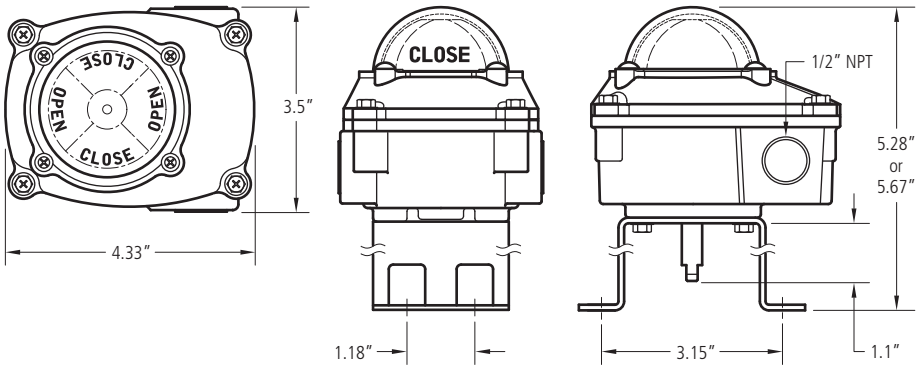

YH, YO & YE Series

Limit Switch

The YH, YO & YE Series offers one of the most versatile platforms for adapting to a variety of valve systems. The explosion/flame proof design is CSA/FM approved and ATEX certified for use in hazardous environments. With the epoxy coated anodized aluminum enclosure it may be used in corrosive heavy wash down areas as well.

In North America, FM and CSA have certified the YH, YO & YE Series for use without seal fittings in all hazardous areas. By passing special pressure piling tests, the enclosure was certified for this elite distinction. Now, a time-consuming procedure can be safely eliminated in Division 1 areas.

The YH, YO & YE Series design offers two conduit entries with extra wire terminations on the terminal block. By terminating solenoid valves in the switch enclosure, significant savings are realized by eliminating a junction box, wiring, conduit materials and labor.

FEATURES

- Screw-on cover allows quick enclosure access, saving you valuable maintenance and set-up time. The cover provides a vapor tight seal and allows entry to internal components in less than five seconds.
- Pre-wired and labeled terminal strip enables quick, convenient attachment of field wires.
- Reliability with switching options that include Maxx-Guard proximity switches and mechanical switches.
- Quick set cams are easy to adjust with "Touch and Tune" switch settings allowing you to make adjustments in seconds without the use of tools.
- Top inner and bottom outer shaft O-rings seal the drive bushing from both external corrosives and internal contaminants that enter the enclosure. Seals contain the drive bushing lubricant assuring smooth operation.
- Space saving visual indicator offers excellent viewability without sacrificing accessibility or adding to space requirements. Red for closed, green for open. Indicators are also available with continuous percentage or three-way indication.

YH, YO & YE SERIES MODEL NUMBERING

Model Number: **Y** X X

Configuration:
H = (2) LED Proximity Switches
O = (2) LED Proximity Switches
E = (2) Mechanical Switches

Optional:
Port Style:
(Leave blank for 2-way Valves)
L = For L Ported 3-way Valves
T = For T Ported 3-way Valves

TEMPERATURE RANGE

-4˚F to 176˚F

MATERIALS OF CONSTRUCTION

Housing:
Epoxy coated anodized marine grade aluminum.

Cover:
Epoxy coated anodized marine grade aluminum (YH & YE), Lexan® polycarbonate (YO).

Elastomer Seals:
BUNA-N.

Drive Shaft:
Stainless steel.

Fasteners:
Stainless steel.

Indicator:
Lexan® polycarbonate.

YH, YO & YE Series

Limit Swicth

(Epoxy coated aluminum or Lexan® polycarbonate cover)

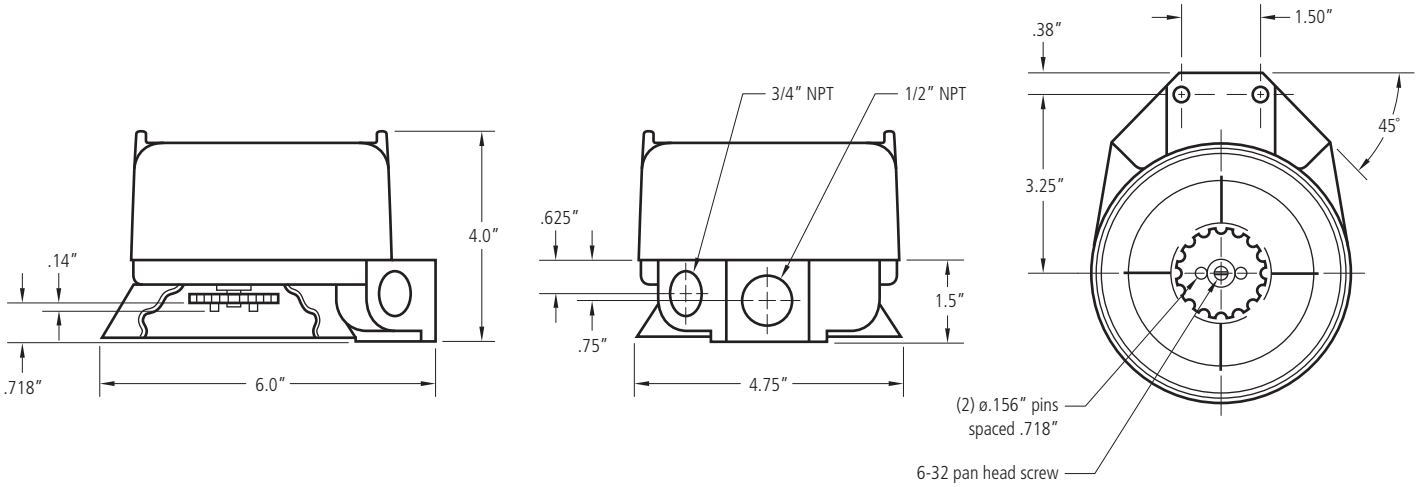

YH APPROVALS & RATINGS (ALUMINUM COVER)

- CSA/FM approved.
- Class I Groups* C and D, Div. 1.
- Class I Groups A, B, C and D, Div. 2.
- Class II Groups E, F and G, Div. 1.
- Class II Groups F and G, Div. 2.

YO APPROVALS & RATINGS (LEXAN® COVER)

- CSA/FM approved.
- Class I Groups A, B, C and D, Div. 2.
- Class II Groups F and G, Div. 2.

YE APPROVALS & RATINGS (ALUMINUM COVER)

- CSA/FM approved.
- Class I Groups* C and D, Div. 1 and 2.
- Class II Groups F and G, Div. 1 and 2.

* FM Group B, Div. 1 and 2 approval available.
Some models may not be CSA and FM approved. Please contact factory for details.

MAXX-GUARD PROXIMITY SWITCH FEATURES (YH & YO)

Maxx-Guard hermetically sealed reed switches are suitable for computer input circuits and general purpose applications and have an operating life of 5 million cycles.

Temperature Range:
-4˚F to 180˚F.

Switch Rating:
0.30 A @ 125 VAC,
0.20 A @ 30 VDC.

Maximum Voltage Drop:
3.5 V @ 10 mA, 6.5 V @ 100 mA.

Wiring Diagram:

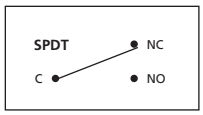

SPDT MECHANICAL SWITCH FEATURES (YE)

Low cost single-pole double-throw mechanical switches with silver contacts are recommended for high power 120 VAC applications and have an operating life of 400,000 cycles. Gold contacts may be used in 24 VDC computer input applications and have an operating life of 100,000 cycles

Temperature Range:
-4˚F to 180˚F.

Switch Rating (Silver Contacts):**
10 A @ 125/250 VAC,
0.5 A @ 125 VDC.

Wiring Diagram:

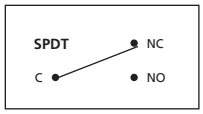

** Not recommended for electrical circuits operating at less than 20 mA @ 24 VDC.

UA & UB Series

Limit Switch

The UA/UB Series solid state proximity switch is a target puck with position indicator, two red LEDs and two solid state switches (N/O and 1 open, 1 closed).

FEATURES

- NEMA-3, 4, 6, 12, 13 and IP67 enclosure.
- 6' cable.
- Designed for NAMUR actuator pad and shaft.

SPECIFICATIONS

Minimum Load Current:
5 mA.

Maximum Load Current:
20 mA.

UA & UB SERIES MODEL NUMBERING

Model Number: **U** X

Current:
A = AC/DC
B = DC

WIRING DIAGRAM (UA)

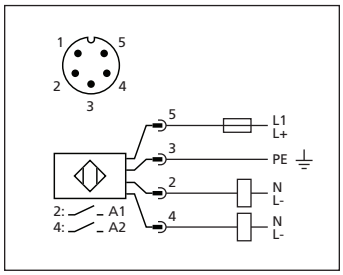

WIRING DIAGRAM (UB)

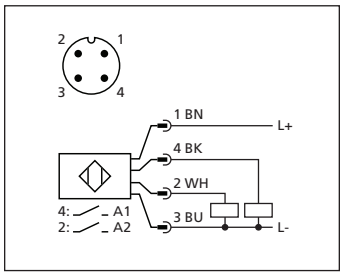

SO Series

Limit Switch Box

The S**O** series limit switch box provides a compact design and the most economical solution for both visual and remote electrical indication of rotary valve/actuator position. Integral NAMUR mounting legs provide additional cost savings by eliminating the need for a separate mounting bracket. The switch options available make the S**O** series suitable for use in NEMA 4, 4X weather proof applications and intrinsically safe applications.

FEATURES

- IP65 weather proof enclosure.
- Compact design.
- Flat or 3D visual position indicator.
- Integral mounting bracket that conforms to NAMUR VDI/VDE3845 dimensional standards.
- Easy-Set splined cams for tool-free calibration and positive vibration resistant engagement.
- Standard PCB and extra solenoid terminals.

MATERIALS OF CONSTRUCTION

Body:
Die cast aluminium, nickel plated.

Cover:
UV resistant V0 polycarbonate.

Shaft:
Reinforced techno polymer.

Fasteners:
Stainless steel.

SO SERIES MODEL NUMBERING

Model Number: **SO** XX **20N-**X X

Switch Type:
01 = Electromech SPDT
Ag plated contacts
70 = Proximity NAMUR
P+F NJ2-V3-N
71 = Proximity NO
P+F NBB2-V3-US
73 = Proximity PNP NO
P+F NBB2 V3 E2
75 = Proximity NO/NC
programmable
IFM IS5026
83 = Proximity NO
P+F NBB3 V3 Z4

Cable Entry:
1 = 1 1/2″ NPT
2 = M20x1.5

Optional:
H = 3D visual indicator

TEMPERATURE RANGE

5°F to 176°F

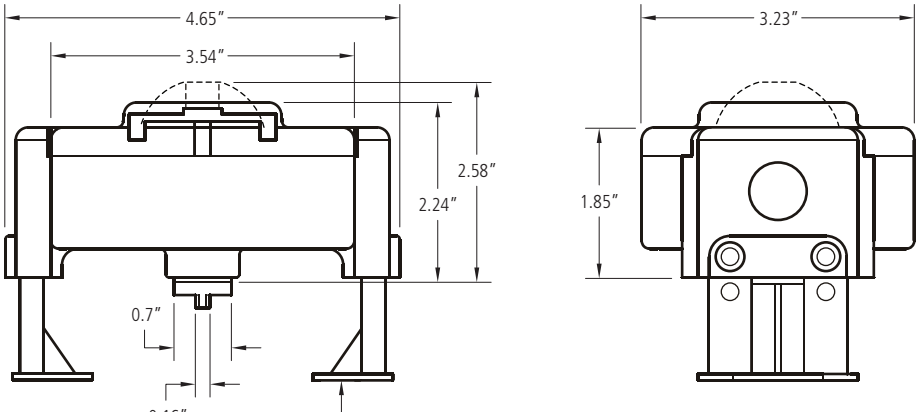

Sliding bracket is adjustable to both 1.18″ x 3.15″ and 1.18″ x 5.12″ top pattern, and 0.79″, 1.18″, 1.58″ and 1.97″ pinion heights.